AMERICAN & OHIO LOCOMOTIVE CRANE CO.

811 Hopley Avenue
P.O. Box 511
Bucyrus, Ohio 44820

800-993-6446 ~ 419-562-6010 ~ Fax: 419-562-2565 ~ www.alocrane.com

OEM Product Support Bulletin No. 11

DATE: February 24, 2009 **(revision date)**

SUBJECT: **TRACTION GEAR CASE SEAL RETROFIT KIT** **Kit Part #: 500247**

RATING:

☐ **DIRECTIVE** (Action is required)

☐ **ALERT**

☐ **INFORMATION**

☒ **PRODUCT IMPROVEMENT** (Enhance Product)

Machine Model (s): All Ohio DE's

Serial Numbers: All DE's equipped with GE-763 Traction Motors

Summary: Seal Kit updates the Traction Gear Cases to the latest production design.

Operational Impact:

> Cleaner operating conditions for motor.
> Longer gear life due to improved lubrication.
> Heavy duty high speed oil seals.
> Easy to install and designed for retrofit.
> Seal Kit contains Gear Case Adapter, Oil Seal, Sleeve and Gear Case Machining Instructions.

Warranty: n/a

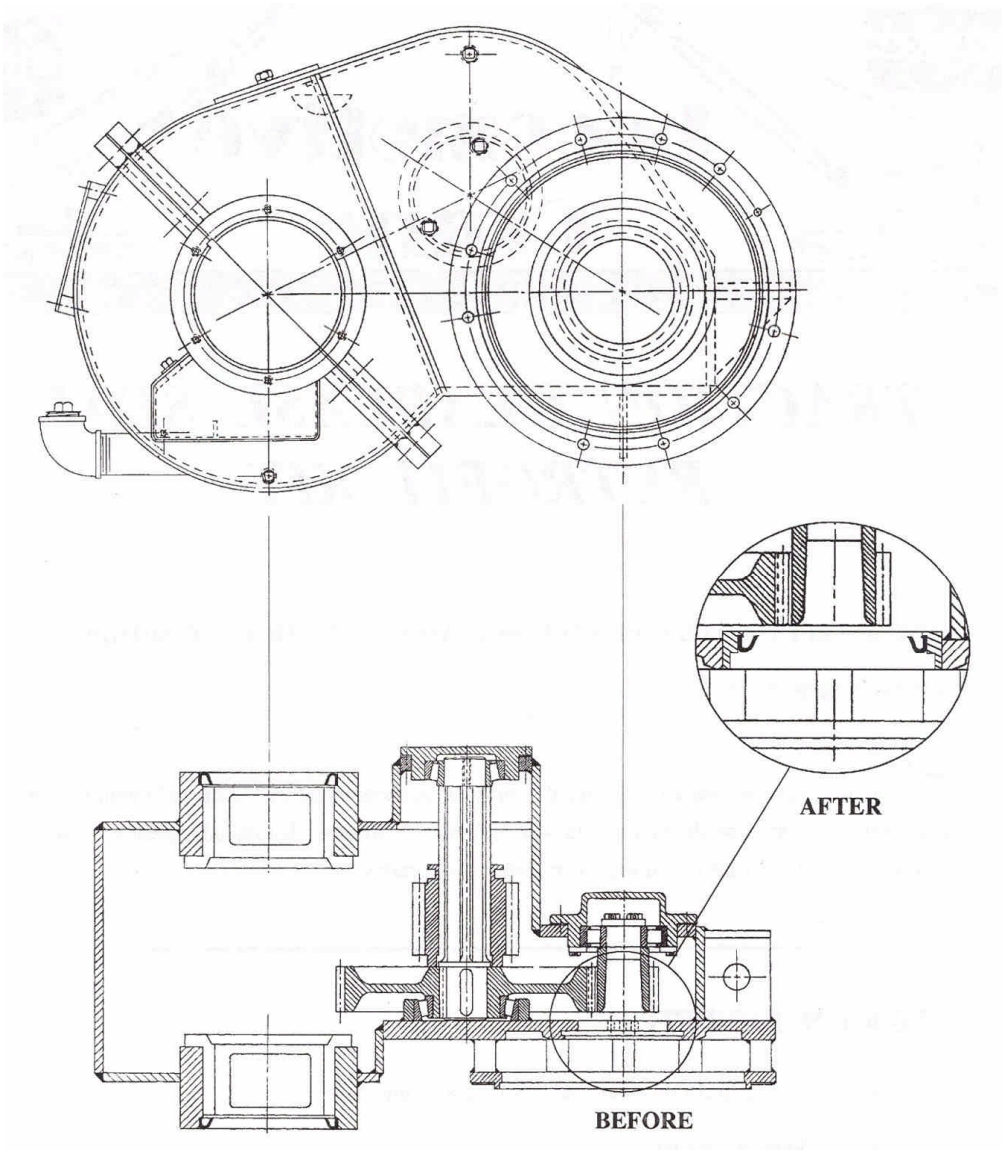
AFTER
BEFORE